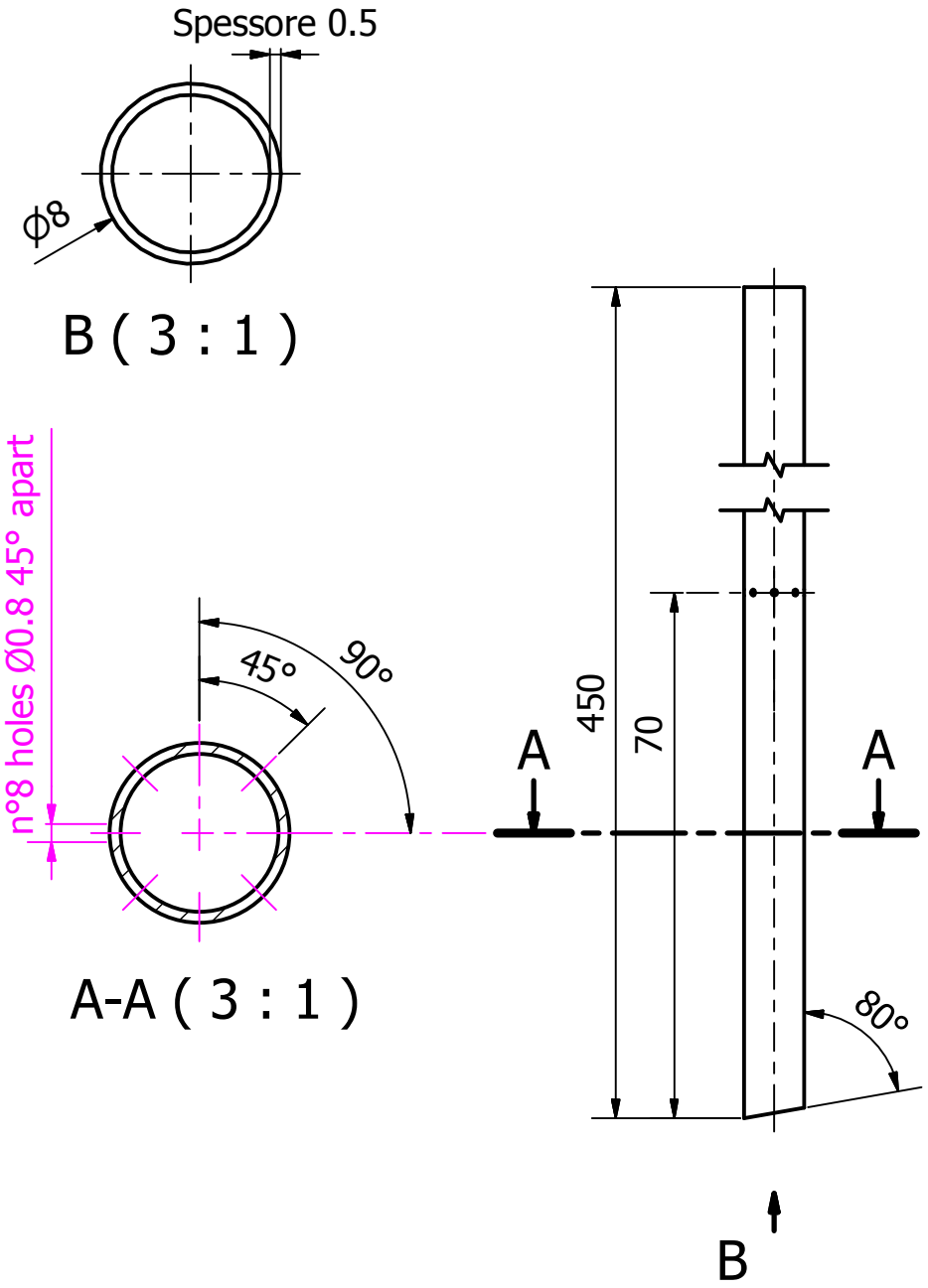

Author	Date
GC,JLJ	02/10/2011

http://www.basicairdata.eu

Basicairdata SV-007 - Pitot - Tube with static ports

Sheet 1 / 1